FBs-CBES

Ethernet Communication Board



Features

- Support iMonitor FATEK IoT Services*
- Multi-client accessible
- Modbus Server operation mode
- FATEK Server and Client operation mode
- IP-based access control
- TCP/IP support 8 connections(Server operation mode)

Introduction

The FBs-CBES is an Ethernet and IoT communication expansion board for FATEK FBs series PLCs.

The FBs-CBES is a compact CPU application expansion board that doesn't occupy additional module space. With this expansion board, the FBs-CPU module PLC can directly support FATEK IoT services for Internet of Things (IoT) applications without the need for a Gateway or HMI. It can actively (client mode) or passively (server mode) connect to controllers and computers on the internet through Ethernet by configuring the IP address.
This expansion board is suitable for FBs series PLCs produced after a certain year and allows for easy remote monitoring and diagnosis of the PLC.

When in use, this expansion board will occupy Port1 and Port2 communication ports on the host. Port1 is fixed for FATEK server mode and is used for ladder program editing and debugging. Port2 supports Modbus-TCP server mode and FATEK client mode. Once Port1 and Port2 settings are completed, the communication port parameters on the PLC will be automatically adjusted based on the configured working mode.

Specification

Network Specification

Network interface- 10/100BaseT
Network protocol- TCP/IP
Application protocol- FATEK, Modbus/TCP, DHCP, DNS, NetBIOS.
PLC interface- Port1, Port 2
PLC interface speed- 307.2Kbps
Operating mode- Fatek: Server / Client
Modbus: Server
Application ports- Modbus-TCP – 502, FATEK – 500
Security mechanism- IP-based access control
Configuration methods-via Ethernet with utility program.
Firmware update method-via Internet

IoT Specification

iMonitor- CBES supported 10 dataitems limited.

Common Specification

Indicator(s) : LINK/ACT(Green LED)、SPEED(Red LED)
Internal Power Consumption: 5V, 250mA
Operating Temperature : 5~55℃
Storage Temperature : -25~70℃

*FBs-CBES is forward compatible with FBs series PLC produced after 2016 (OS V4.51 and above)
*If FBs-CBES is installed on an incompatible FBs CPU, the CPU will stop and show an error code (R4049=13, (Y0,Y1,Y2,Y3)= (1,0,1,1))

Jumper Setting

CBES

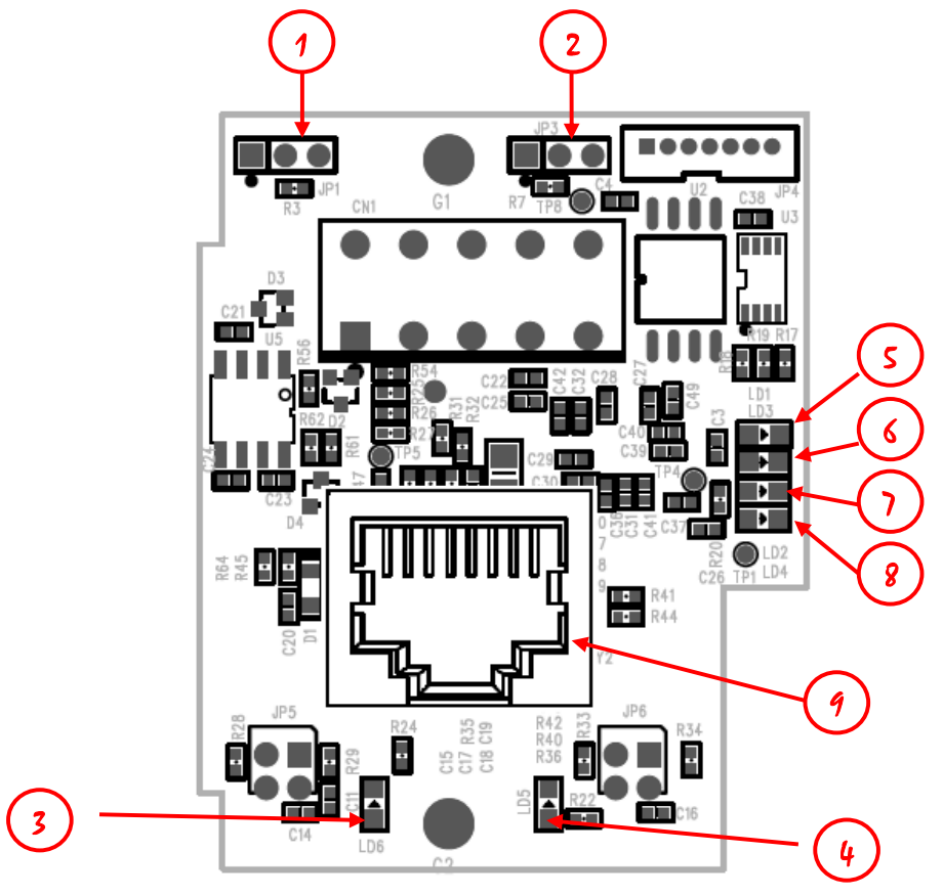

① NP jumper: When the left two pin headers are short circuit, no password protection.

② Boot jumper: When the right two pin headers are short circuit, forced to enter Boot operation mode after booting.

③ Ethernet status indicators (Link): Lights on means the network connection is normal, flash means there has data activity on the network.

④ Ethernet status indicators (Speed): Lights on means the connection speed is 100Base-TX, off means 10Base-T.

⑤ Port1 RX green signal indicator : Lights on means port1 of the PLC has sent messages to the board.

⑥ Port1 TX red signal indicator: Lights on means the board has sent messages to port1 of the PLC.

⑦ Port1 RX green signal indicator: Lights on means port2 of the PLC has sent messages to the board.

⑧ Port2 TX red signal indicator: Lights on means the board has sent messages to port2 of the PLC.

⑨ Ethernet connector: RJ45 standard connector.

Jumper Setting

CBES(G02)

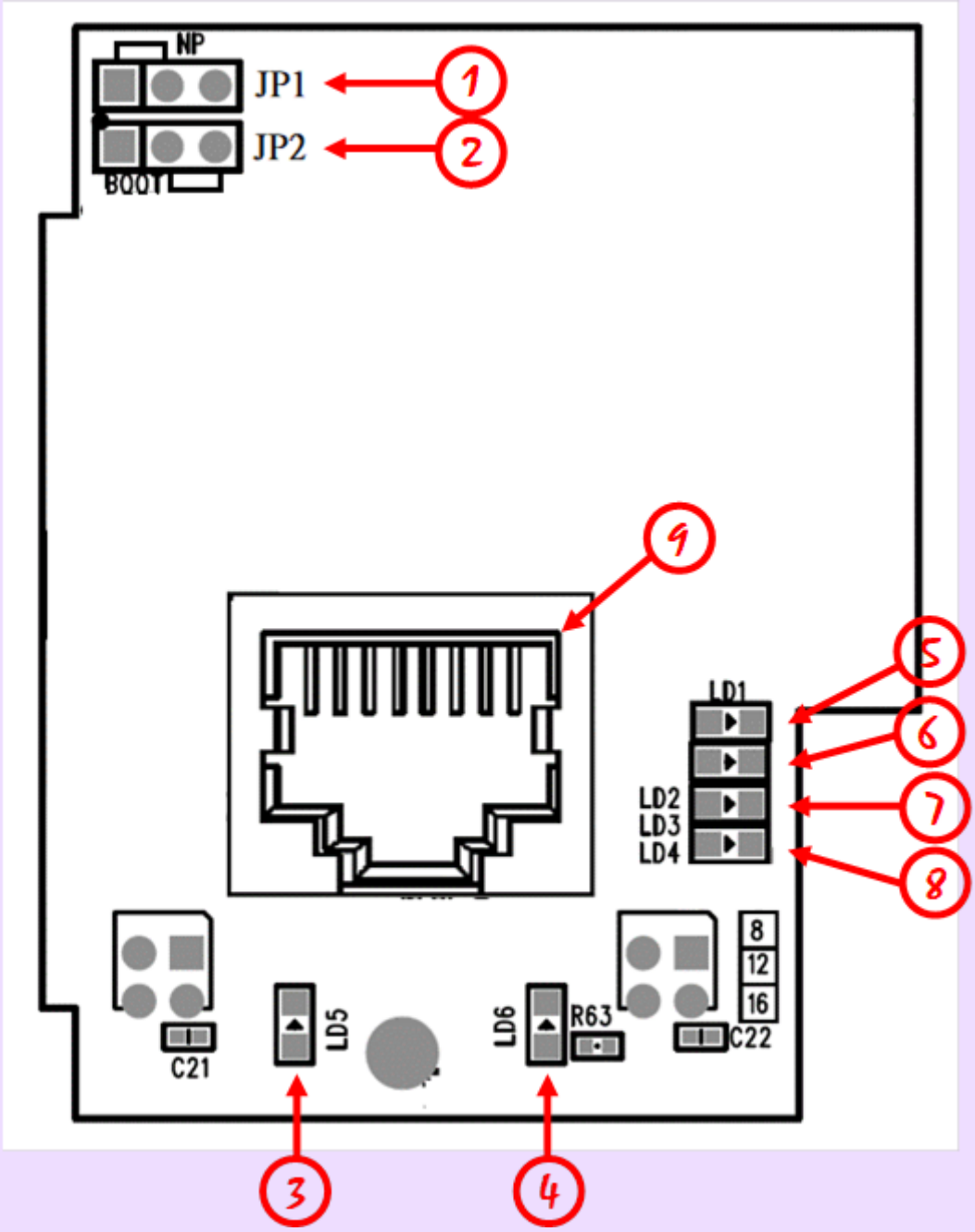

① NP jumper: When the left two pin headers are short circuit, no password protection. When the right two pin headers are short circuit or three pin header all open circuit, have password protection.

② Boot jumper: When the right two pin headers are short circuit, forced to enter Boot operation mode after booting.
When the left two pin headers are short circuit or three pin header all open circuit, going to general operate mode.

③ Ethernet status indicators (Link): Lights on means the network connection is normal, flash means there has data activity on the network.
④ Ethernet status indicators (Speed): Lights on means the connection speed is 100Base-TX, off means 10Base-T.
⑤ Port1 RX green signal indicator : Lights on means port1 of the PLC has sent messages to the board.
⑥ Port1 TX red signal indicator: Lights on means the board has sent messages to port1 of the PLC.
⑦ Port1 RX green signal indicator: Lights on means port2 of the PLC has sent messages to the board.
⑧ Port2 TX red signal indicator: Lights on means the board has sent messages to port2 of the PLC.
⑨ Ethernet connector: RJ45 standard connector.